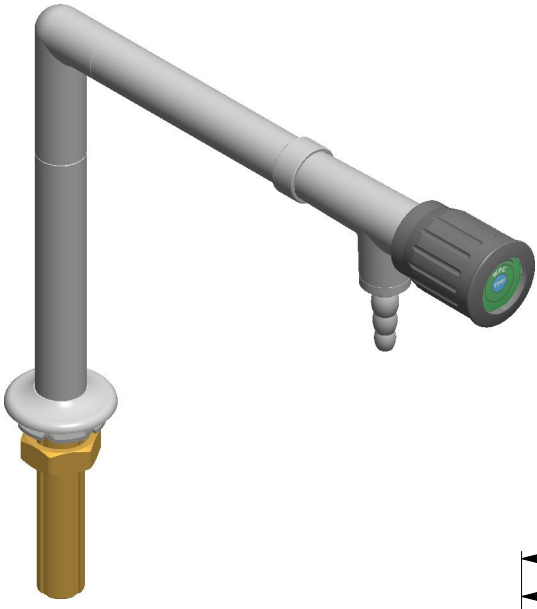

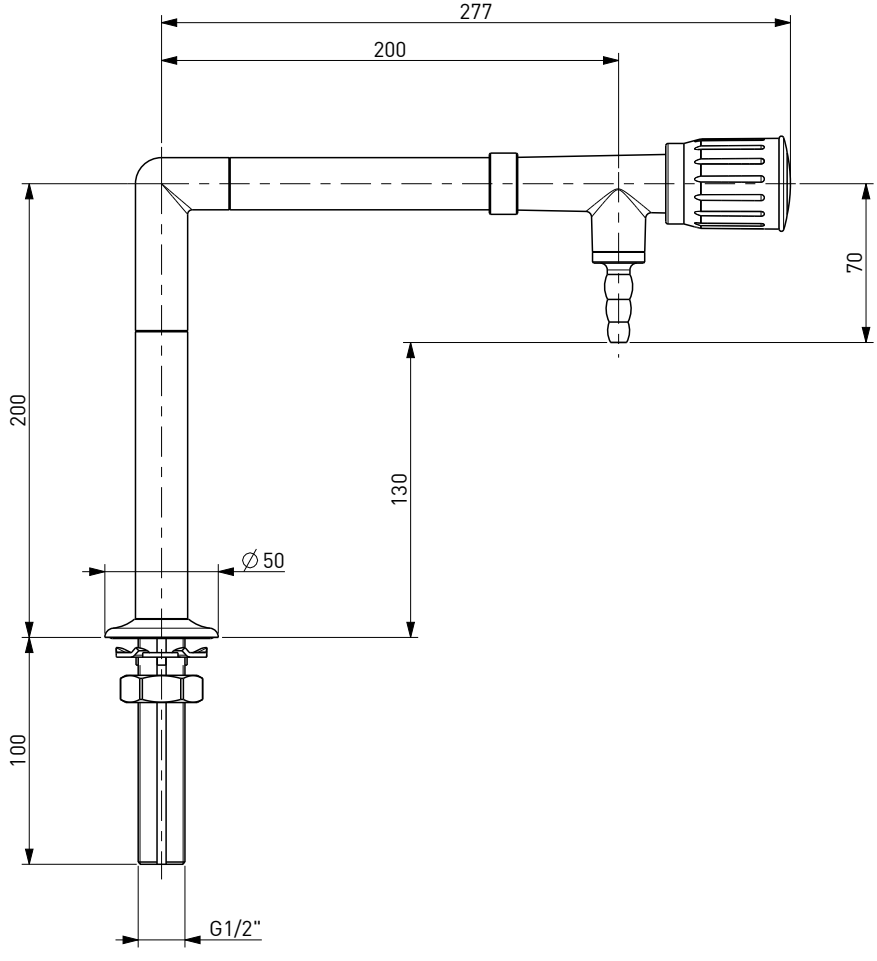
277
200
70
200
130
∅50
100
G1/2"