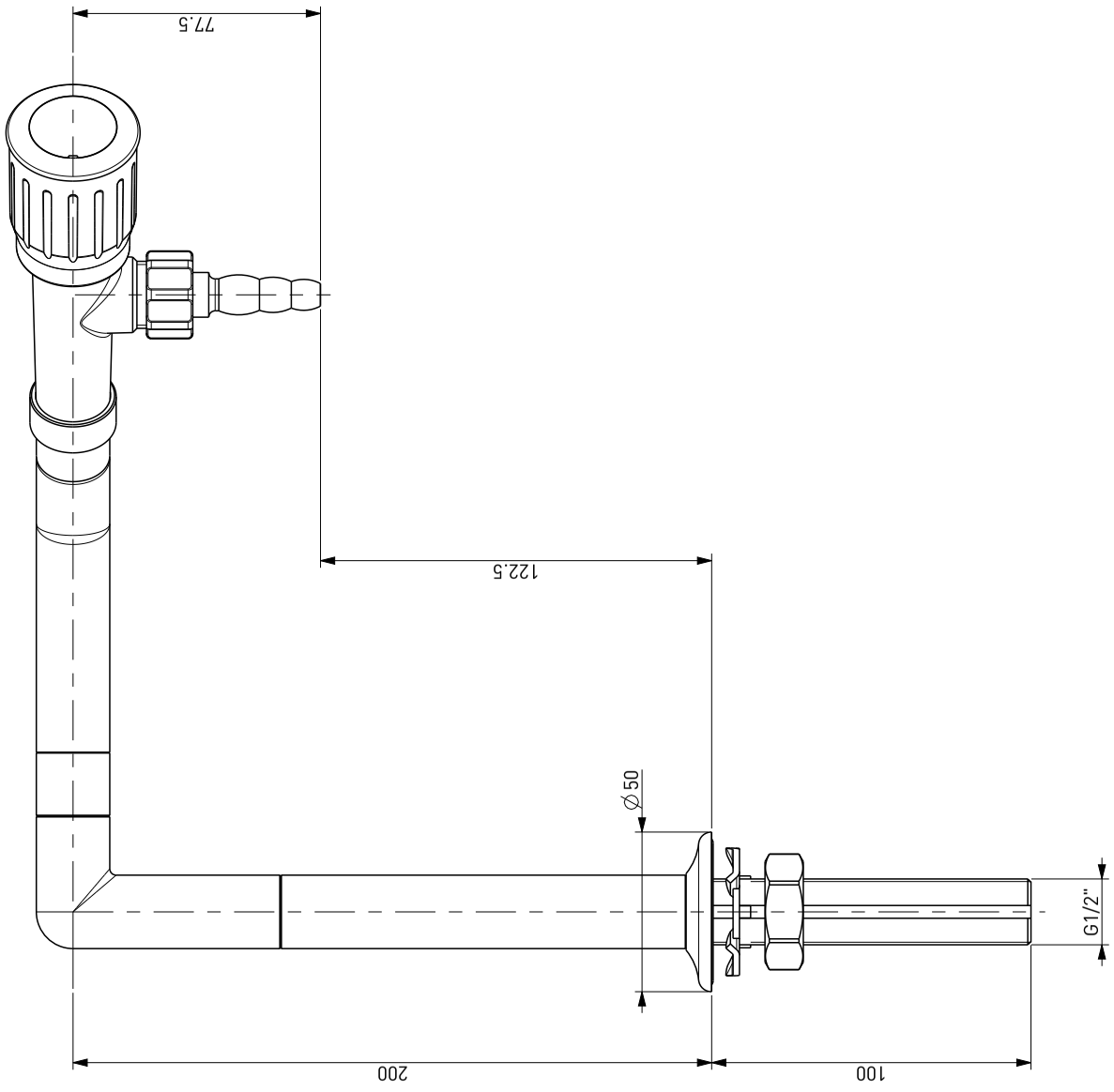
77.5
122.5
Ø50
G1/2"
200
100

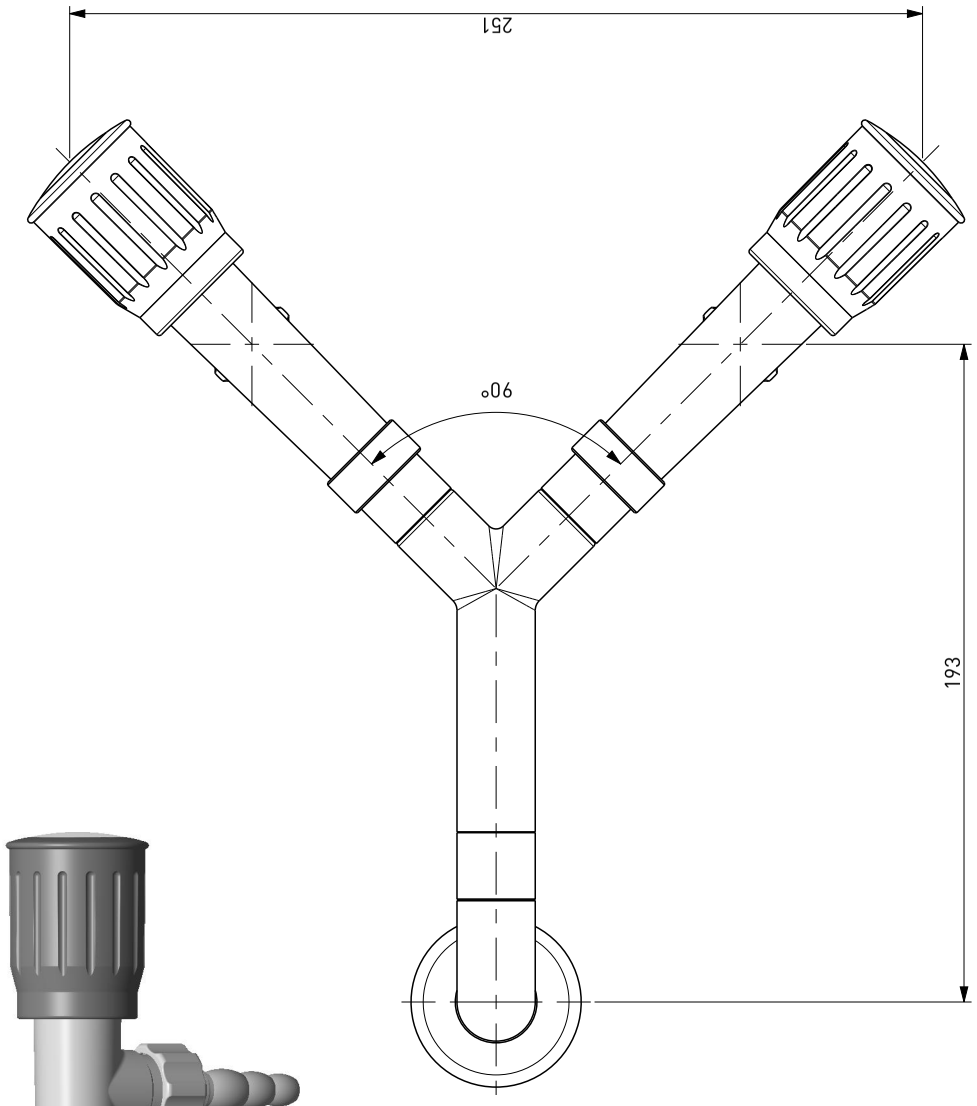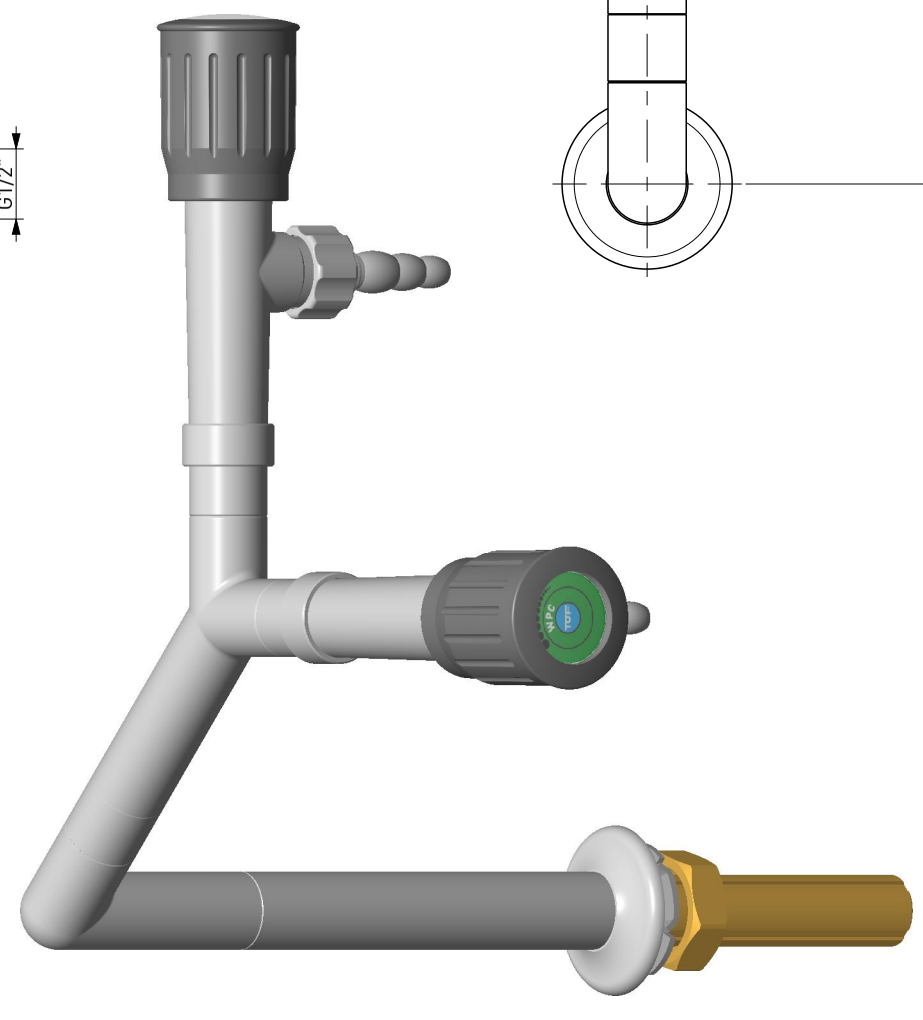
251
90°
193