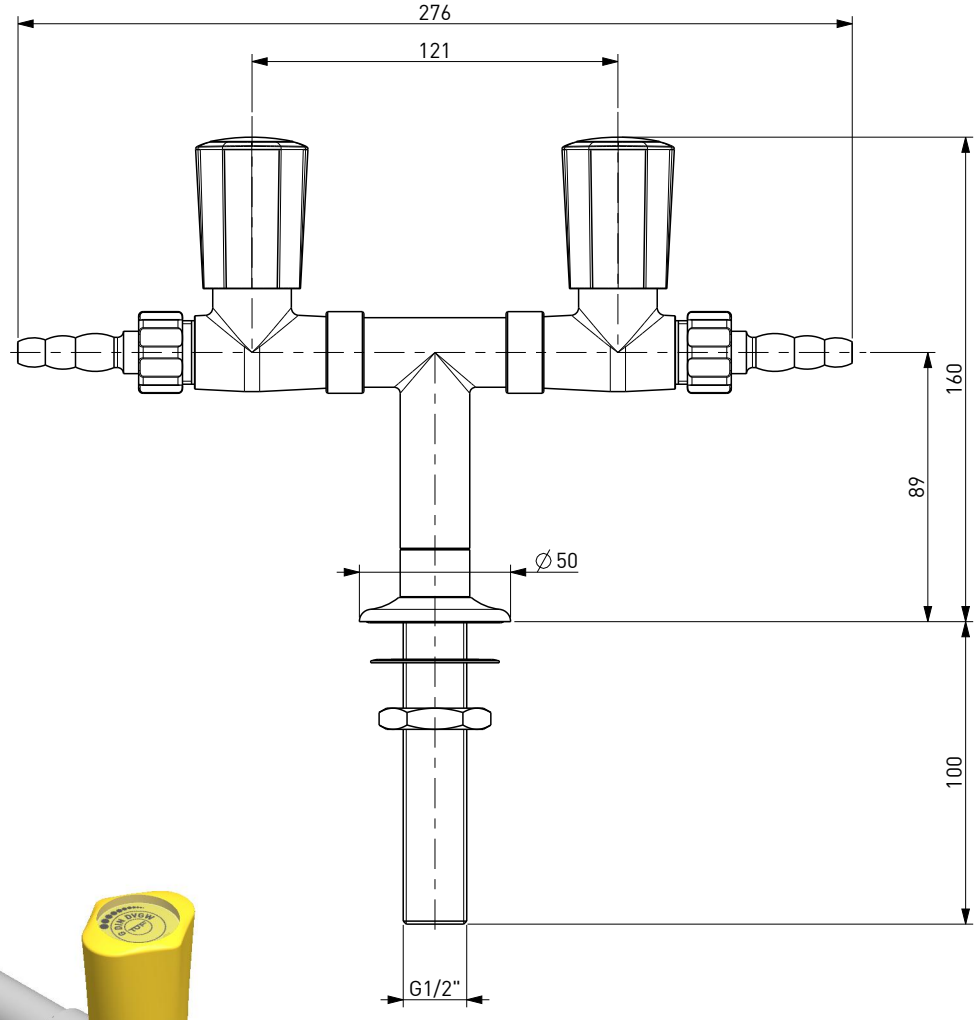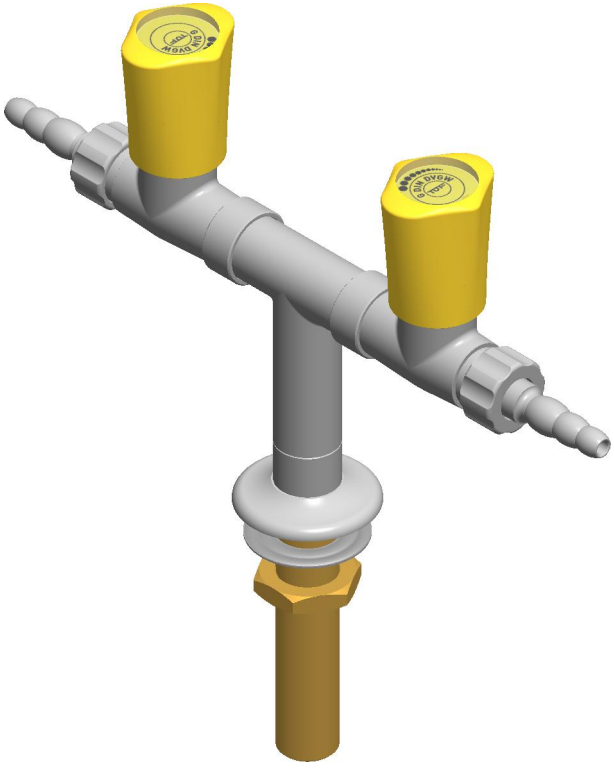
276
121
160
89
∅ 50
100
G1/2"